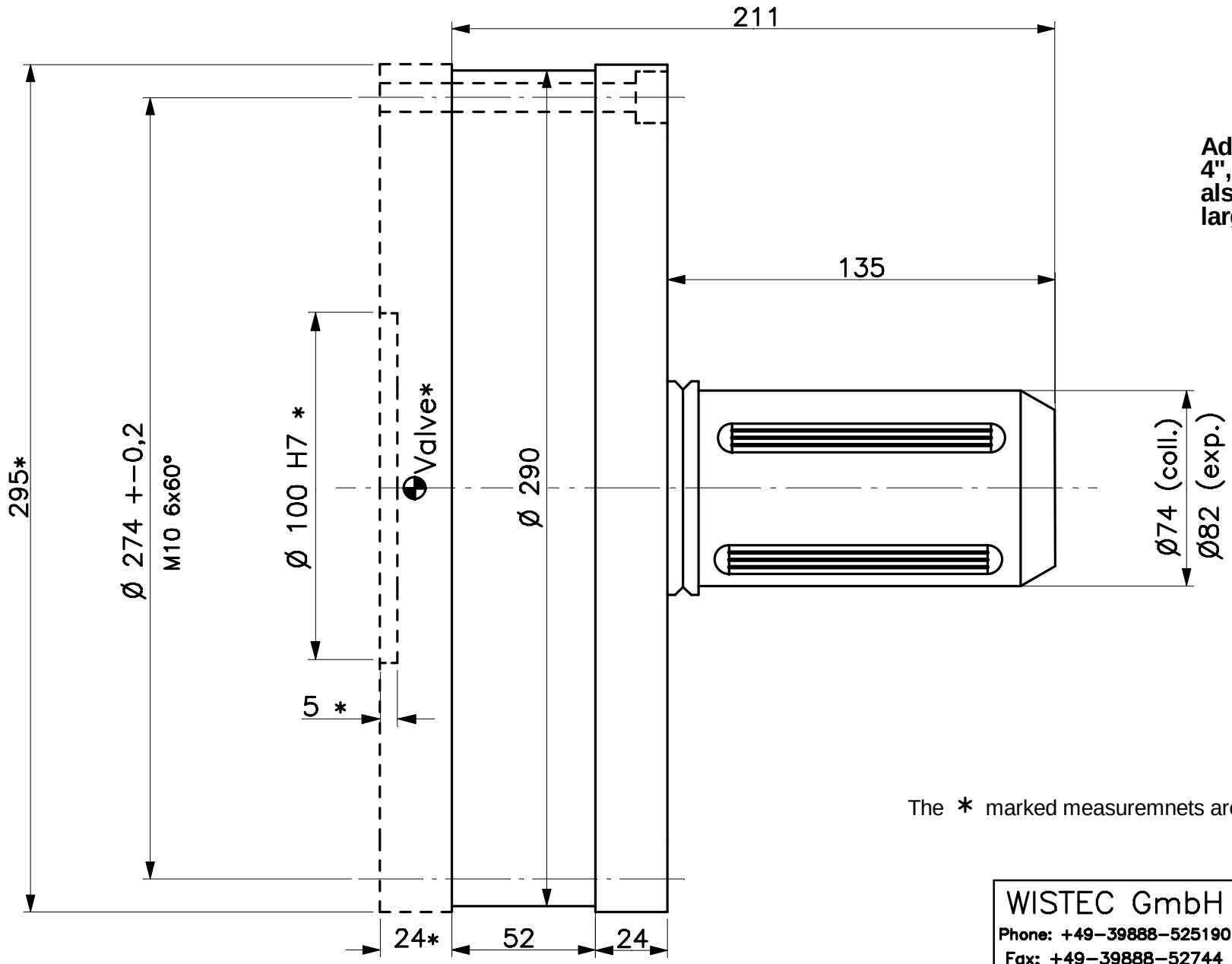

Adapters available for 4", 5", 6"...
also basic chucks for larger dimensions.

The * marked measuremnets are for the machine flange plate.

WISTEC GmbH
Phone: +49-39888-525190
Fax: +49-39888-52744
E-mail: info@wistec.net

Pneumatic-Mechanical Chuck
Type II

3" Version